ZAH-393S Shock Reduction Air Hammer
With Special Chassis Chisel Sets

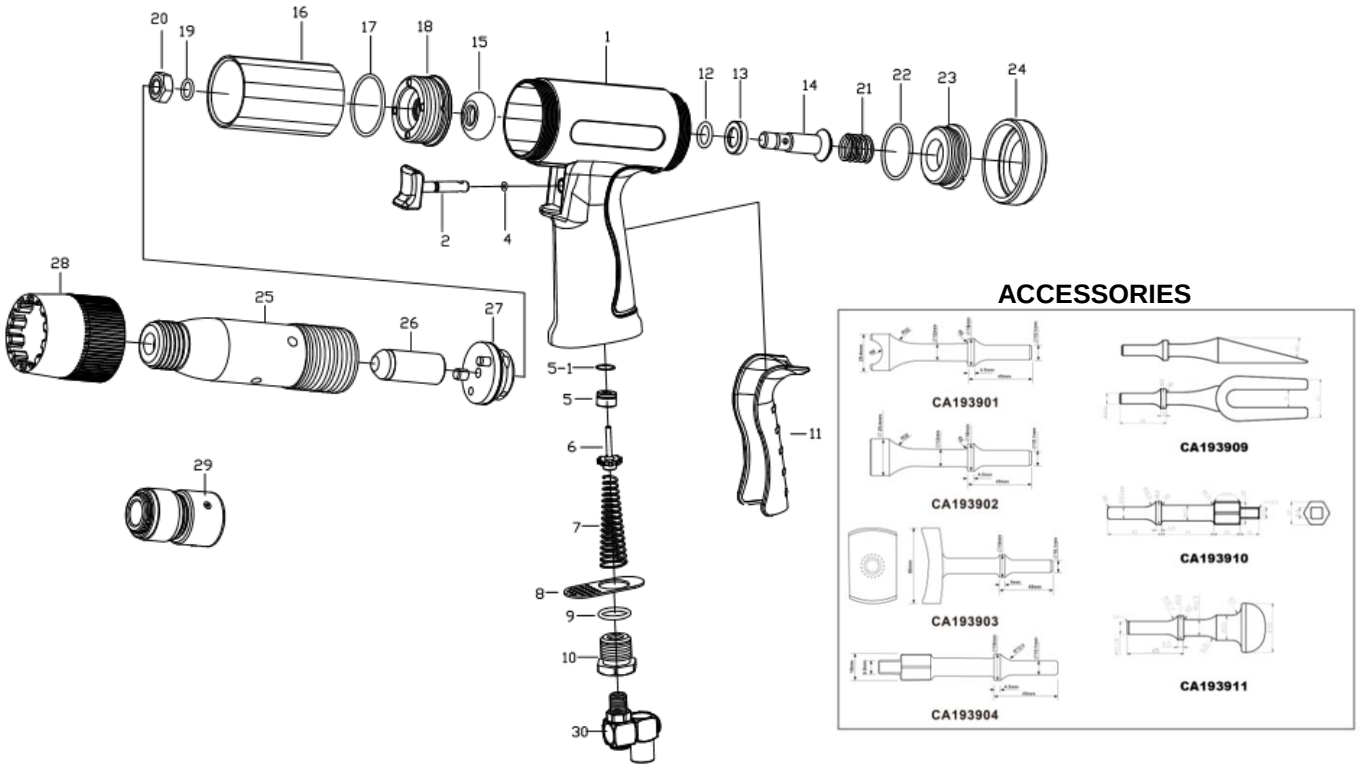

ZAH-393S Shock Reduction Air Hammer
With Special Chassis Chisel Sets

TECHNICAL DATA

Chisel Shank Opening inch(mm)	:	0.401 (10.2)
Bore Diameter inch(mm)	:	3/4" (19)
Stroke Length inch(mm)	:	2-5/8(66)
Operating Air Pressure PSI(bar)	:	6.2(90)
Blows per Minute @ 90 Psig B.P.M	:	3,000
Avg. Air Consumption @ 90 Psig cfm(1/min)	:	4.95(140)
Tool Weight lbs(kgs)	:	4(1.8)
Min. Hose Size inch(mm)	:	3/8(10)
Air Inlet Size inch-NPT/PT	:	1/4" NPTF
Vibration m/s^2	:	10
	:	

PARTS LIST

Index #	Part #	Description
1.	393101B	Handle
2.	293611	Valve Button
*4.	OR0407	O-Ring
*5.	293222	Valve Seat
*5-1.	OR1316	O-Ring
6.	293203	Actuating Valve Ass'y
7.	293204	Spring
8.	442207	Diffusion Plate
9.	OR1621	O-Ring
10.	280221	Air Inlet Bushing(18T)
11.	393102	Handle Sleeve
*12.	OR1217	O-Ring
13.	193429	Valve Seat
14.	193418	Air Inlet Tube
15.	193426	Bumper
16.	193415	Inner Housing
17.	OR3741	O-Ring
18.	193416	Head-Inner Housing
19.	OR1014	O-Ring
20.	HN1013	Lock Nut

Index #	Part #	Description
21.	315608	Spring
22.	OR3034	O-Ring
23.	293104	End Cap
24.	293103	Rubber Cap
25.	193401	Cylinder
26.	193402	Piston
27.	193300	Valve Ass'y
28.	193413	Exhaust Deflector

Accessories

29.	192914	Quick Change Retainer 1PC
30.	922A18/19	1/4" Swivel Joint 1PC
*	CA193903	Hammer Punch 1PC
*	CA193909	Hammer Punch 1PC
*	CA193901	Hammer Punch 1PC
*	CA193902	Hammer Punch 1PC
OPT.	CA193904	Hammer Punch 1PC
OPT.	CA193910	Hammer Punch 1PC
	CA193911	Hammer Punch 1PC